# SLOAN 8180-3.5-DFB-T

## CODE NUMBER

3790060

## DESCRIPTION

3.5 gpf, Dual-Filtered Fixed Bypass Diaphragm, Polished Chrome Finish, 1.5" Flush Connection, Single Flush, Battery, Sloan® Exposed Sensor Urinal Flushometer.

## DETAILS

- Flush Volume: 3.5 gpf (13.2 Lpf)
- Finish: Polished Chrome (CP)
- Power Type: Battery
- Valve: Diaphragm
- Bypass: Dual-Filtered Fixed Bypass Diaphragm (DFB)
- Valve Body Material: Semi-red Brass
- Fixture Type: Urinal
- Fixture Connection: Top spud
- Rough-In Dimension: 11 ½" (292mm)
- Spud Coupling: 1 ¼" (32mm)
- Supply Pipe: 1" (25mm)
- Flush Connection: 1.5" (T)

## FEATURES

- High chloramine resistant PERMEX synthetic rubber diaphragm with Linear Filtered Bypass and Vortex Cleansing Action
- Valve body, Cover, Tailpiece and Control Stop shall be in compliance with ASTM Alloy Classification for Semi-Red Brass
- Valve shall be in compliance to the applicable sections of ASSE 1037.

## COMPLIANCES & CERTIFICATIONS

(ADA Compliant, UPC Certified, BAA Compliant)

## RECOMMENDED SPECIFICATION

Valve Body, Cover, Tailpiece and Control Stop shall be in conformance with ASTM Alloy Classification for Semi- Red Brass. Valve shall be in compliance with the applicable sections of ASSE 1037 and ANSI/ASME 112.19.2.

## VALVE OPERATING PRESSURE (FLOWING)

15–80 PSI (103–552 kPa). Specific fixtures may require greater minimum flowing pressure - consult manufacturer requirements.

## DOWNLOADS

- G2 Optima Plus Installation Instructions
- Control Stop Repair and Maintenance Guide
- Flush Connections Flanges Repair and Maintenance Guide
- Tail Piece Repair and Maintenance Guide
- Sloan Optima Plus Repair and Maintenance Guide
- Additional Downloads

## NOTES

All information contained within this document subject to change without notice.

Looking for other variations of the SLOAN 8180 product? View the general spec sheet with all options.

Find a compatible urinal for this flushometer.
Find a compatible water closet for this flushometer.

**Sloan 10500 Seymour Ave, Franklin Park, IL 60131**
Phone: 800.982.5839 • Fax: 800.447.8329 • sloan.com

**ROUGH-IN**

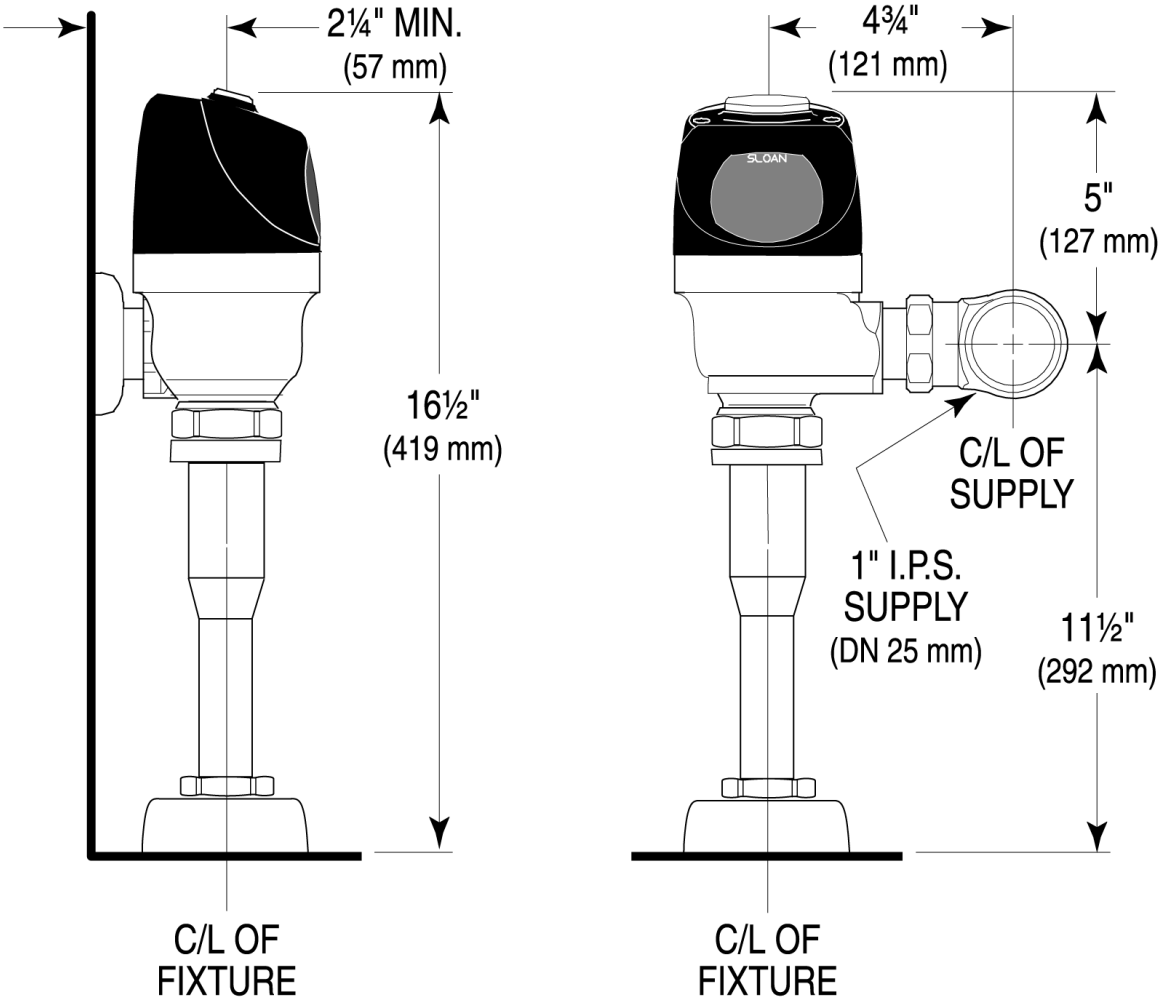


**Sloan 10500 Seymour Ave, Franklin Park, IL 60131**
Phone: 800.982.5839 • Fax: 800.447.8329 • sloan.com